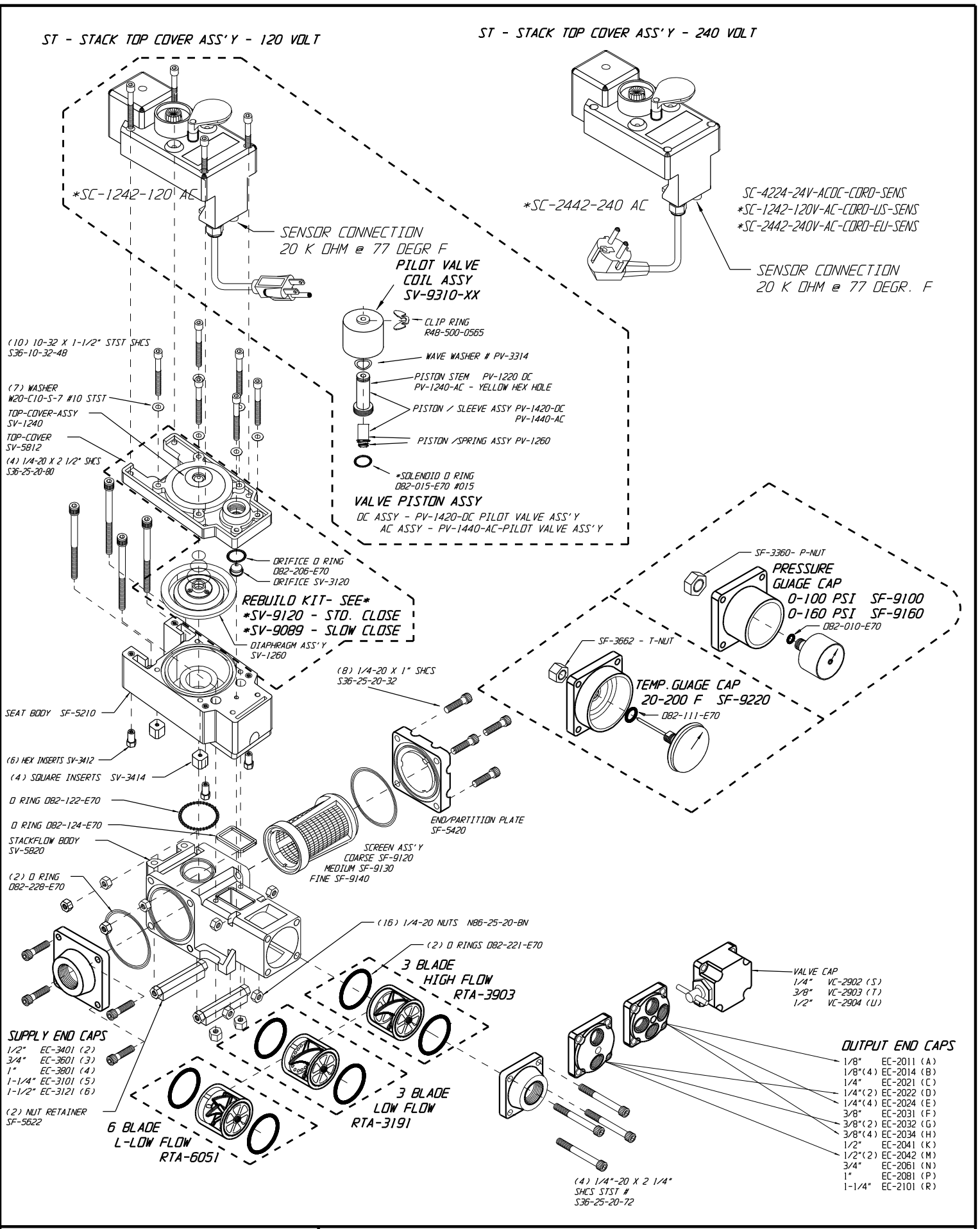

CITO PRODUCTS INC
N8779 HWY X WATERTOWN WI 53094 USA
TEL (920)261-5799 www.citoinc.com

StackPulseController

SA-1020-C